REV. LTR.	DESCRIPTION	SIGN	DATE
△X1	Change the insertion and extraction force	Li wenhui	2008.1.22

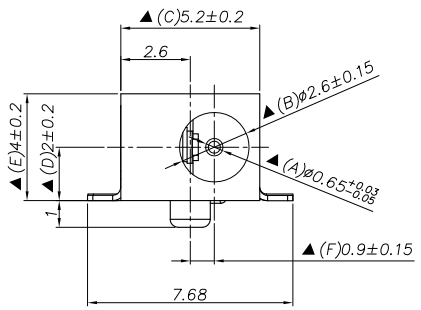

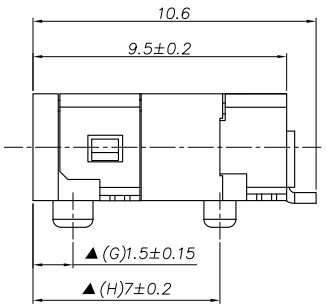

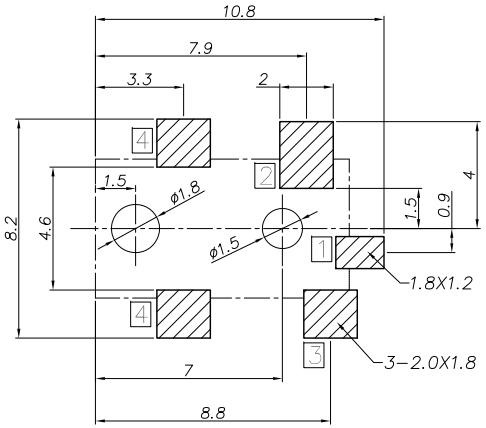

Recommended PCB Layout (Tolerance±0.05)
(Copper-sided View)

Ordering information:

DC 00410 - □ A

(1) (2) (3) (4)

(1):Series type:DC=DC POWER JACK

(2):Series No.

(3):Schematic option: A, B

(4):Center pin diameter: A=Ø0.65

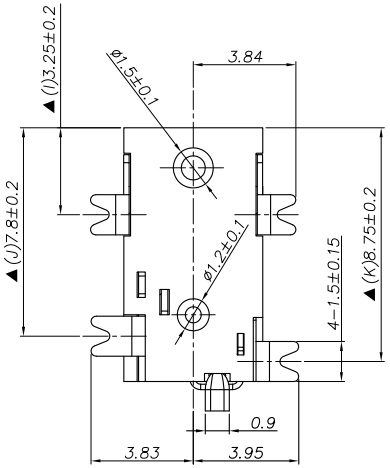

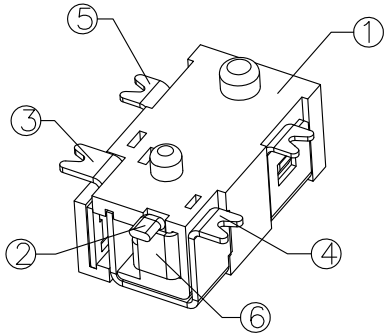

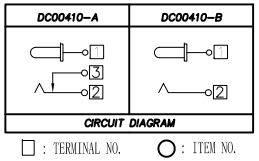

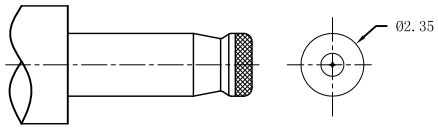

DC MATE PLUG

SPECIFICATION

1.Rating ：DC 20V 2A；
2.Contact resistance：≤30mΩ；
After test:≤50mΩ;
3.Insulation resistance：≥100MΩ (DC500V)；
4.Withstand voltage：500VAC ；
5.Insertion and extraction force：3-30N;
6.life test：5,000 cycles;
7.Operation temperature range:-20˚C～70˚C;
8.Preservative temperature range:-40˚C～85˚C;
9.Sign"▲"is importance dimension.

NO.	DESCRIPTION	QTY	MATERIAL	PART NO.	REMARK
⑥	Hook	1	Stainless steel 0.2t	DC00410-04(WP2-503)	Silver plating
⑤	Earth terminal	1	Brass 0.2.t	DC00410-03(JA-505)	Silver plating
④	Shunt terminal 3	1	Brass 0.25.t	DC00410-02(WP1-502)	Silver plating
③	Tip spring 2	1	Beryllium bronze 0.25t	DC00410-01(TP-504)	Silver plating
②	Center pin 1	1	Phosphor bronze	DC00410-99A(PZ-506)	Silver plating
①	Housing	1	PA9T	DC00410-S1(ST-501)	

UNIT: MM	TYPE: DC POWER JACK	MODEL NO: DC00410-_A	PAPER NO: A4		PAGE 1 OF 1
			TOLERANCE	ANGLES	SCALE / VER
			±0.3	±2°	FULL / 4
DESIGNER BY:	Zhang Xiuke 2011.01.11	丞永實業有限公司			
CHECK BY:		BLUE SOURCES ELECTRONICS CO,LTD.			
APPROVED BY:					